Configuration Guide

INSYS Smart Device Monitoring App

Displaying a value of a Siemens LOGO! on a website

Copyright © 2024 INSYS icom GmbH

Any duplication of this üublication is prohibited. All rights on this publication and the devices are with INSYS icom GmbH Regensburg.

Trademarks

The use of a trademark not shown below is not an indication that it is freely available for use.

MNP is a registered trademark of Microcom Inc.

IBM PC, AT, XT are registered trademarks of International Business Machine Corporation.

Windows™ is a registered trademark of Microsoft Corporation.

Linux is a registered trademark of Linus Torvalds.

INSYS ® is a registered trademark of INSYS icom GmbH.

Debian is a registered trademark of Software in the Public Interest, Inc.

The principles of this publication may be transferred to similar combinations. INSYS icom GmbH does not assume liability or provide support in this case. Moreover, it cannot be excluded that other effects or results than described here are produced, if other, similar components are combined and used.

INSYS icom GmbH is not liable for possible damages.

Publisher

INSYS icom GmbH
Hermann-Köhl-Str. 22

D-93049 Regensburg
Germany

Phone +49 941 58692 0
Fax +49 941 58692 45

E-mail info@insys-icom.com
URL http://www.insys-icom.com

Print 24. Jan. 2024

Item No. -

Version 1.2
Language EN

1 Introduction

General

The present publication refers to a combination of selected hardware and software components of INSYS icom GmbH as well as other manufacturers. All components have been combined with the target to realize certain results and effects for certain applications in the field of professional data transfer.

The exact descriptions of all used components, to which this publication refers, are described in the tables *Hardware, Accessories* and *Software* at the end of this publication.

The symbols and formattings used in this publication are explained in the correspondent section of the device manual.

Some configurations or preparations, which are precondition in this publication, are described in other publications. Therefore, always refer to the related device manuals. INSYS Smart Devices with web interface provide you with helpful information about the configuration possibilities, if you click on "display help text" in the header.

Target of this Publication

An exemplary configuration for a typical Monitoring App application is presented here. If your application has similar requirements, you may modify the configuration on the basis of this Configuration Guide.

This application serves for counting of persons (or also animals) in an enclosed space. Each entry into the enclosed space as well as each exit from this will be detected by a single-entry access control system (e.g. turnstile) or light barrier for this.

A Siemens LOGO! will add the individual entries and subtract the exits and compute the number of persons being present at the moment from this. This actual value will be read out by a connected INSYS Smart Device regularly and written into an HTML form of a website prepared for this. This actual value can then be viewed via the Internet.

The website provided for this can be hosted on any web server. This application will use a web server that is running on the INSYS Sandbox on the router.

The following describes how to configure the Monitoring App of an INSYS Smart Device fault monitor such that it fulfils above described task. It is prerequisite here that the router is ready for operation, i.e. a SIM card is inserted and it is configured accordingly.

The detailed configuration of the control will not be covered here. Please take this from the manufacturer's documentation.

Introduction

Setting up the web server in the sandbox will only be described roughly. You'll find further details about this on the INSYS icom website in the Knowledge Base about the Sandbox (http://www.insys-icom.com/sandbox).

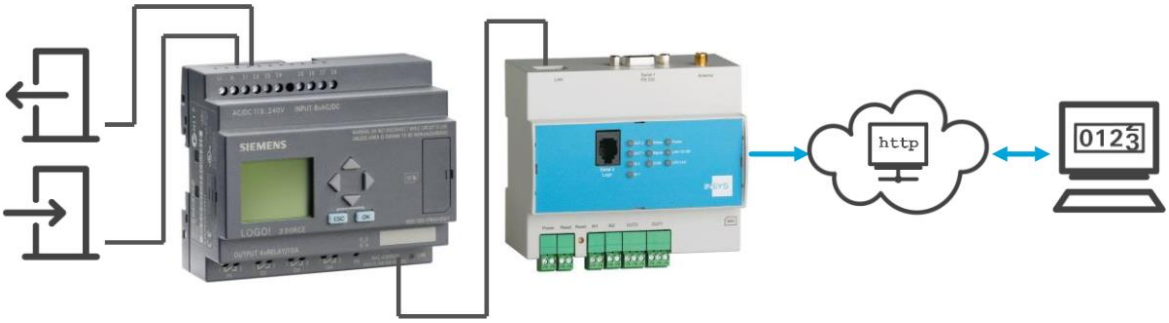

Figure 1: Displaying a value of a Siemens LOGO! on a website – overview

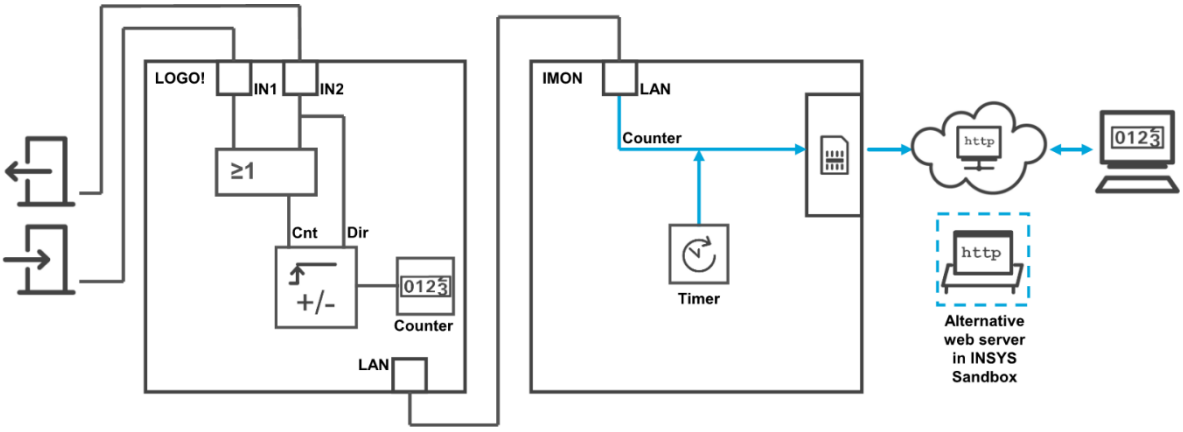

Figure 2: Displaying a value of a Siemens LOGO! on a website – simplified diagram

2 Summary

Router Configuration

How to configure an INSYS Smart Device for reading out a value from a Siemens LOGO! micro controller and displaying the value on a dedicated website (the preparation of the LOGO! and the website are prerequisite). You will find detailed step by step instructions in the following section.

- **Add device "LOGO!"**
- **Add recurrent timer with 15 seconds as element**
- **Add LOGO! function block up/down counter as element**
- **Add monitoring of the timer for expiry**
- **Add HTTP call for setting the value as action**
- **Add assignment of the monitoring to the action**

3 Configuration

Provisions

It is recommended to commission the router as suggested in the Quick Installation Guide. Different settings of the router may result in necessary adjustments of the settings described in the following. Please prepare the following items before starting the configuration of the application:

- Connection to the router
- Configuration in the router
- Preparation of the Siemens LOGO!
- Setting up the website and the web server

- Connection to the router

→ You have access to the Monitoring App of the router via your web browser.

- Configurations in the router

→ The router is logged in to the cellular network (configuration via startup wizard or in "GSM / GPRS" or "UMTS" menu).

- **Preparation of the Siemens LOGO!**

→ The Siemens LOGO! micro controller is ready for operation and the required program is loaded.

You'll find the LOGO! program used here on our website for download (www.insys-icom.com/CG/IMON). It has been created to fulfil the functions of the application described here. You may adjust it to your application accordingly.

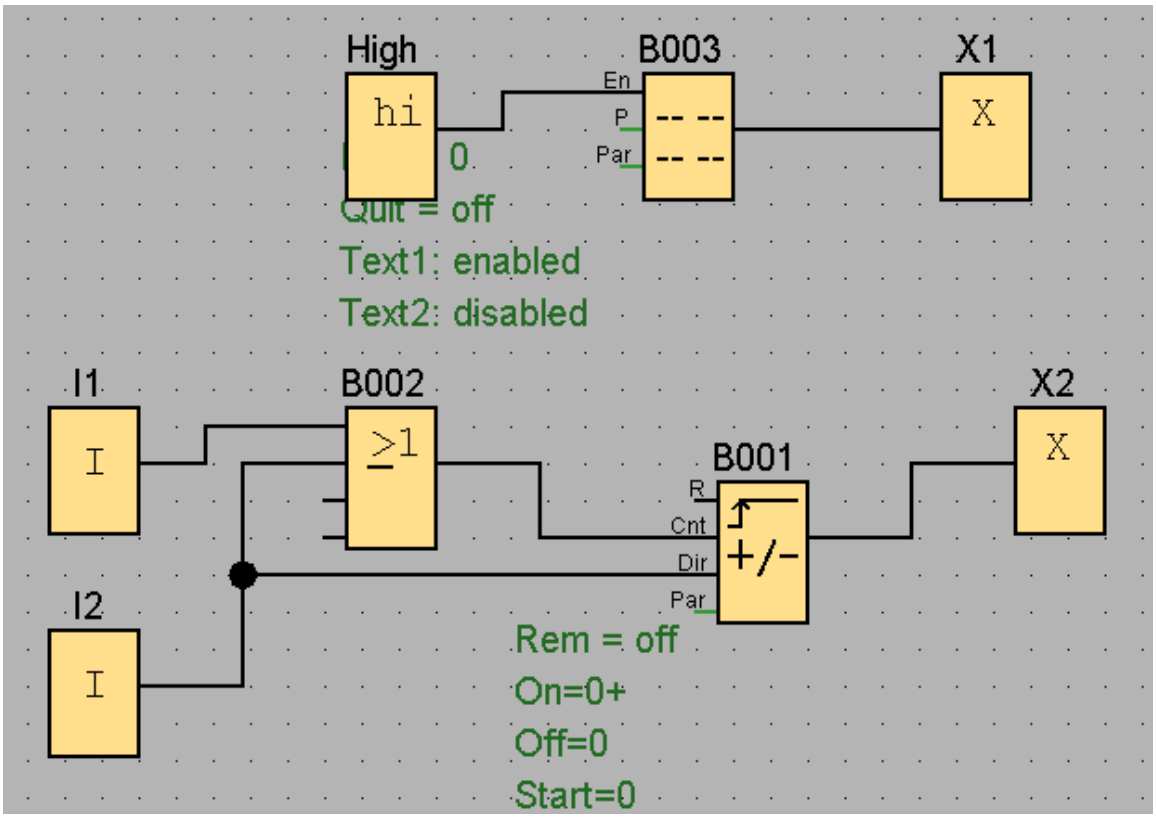

The logic shown in the upper area serves only for the display on the LOGO!. The actual counting logic is shown in the lower area. The pulses of the inputs I1 (entry) and I2 (exit) will be fed to the counter via an OR operation for this. In case of a pulse on input I2, the counting direction of the counter will be changed in addition (subtracting).

- **Setting up the website and the web server**

→ A website for displaying and setting the presence counter exists.

This application requires the existence of a website with an appropriate form field that can be used by the router to set the current attendance figure. This website will usually be hosted on a web server of the customer. The present application uses a web server that is running directly in the sandbox of the router. You'll find the sandbox image used here on our website for download (www.insys-icom.com/CG/IMON). The sandbox image is based on our demo image and has been modified accordingly. You'll find information about uploading the sandbox image in the router manual. You'll find some explanations about the pages that will help you when creating the necessary pages for your application in the following.

The following website will be generated with the sandbox image:

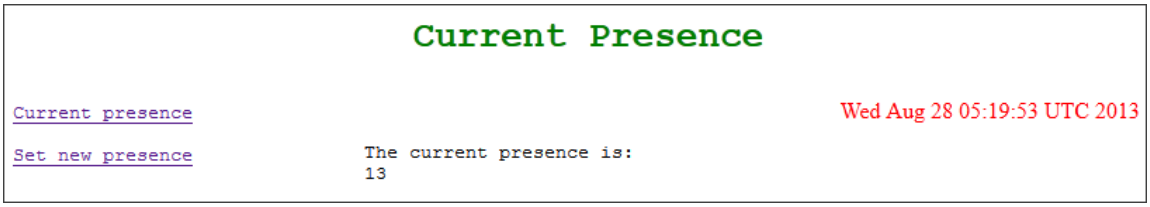

The files necessary for this are located in the subdirectory /var/web of the sandbox.

The file index.html contains a refresh command in the meta tag to update the display of the actual attendance regularly. Moreover, a frame set will be created that will display the file banner.html in the upper frame, the file menu.html in the left frame, and the content generated by the script script_current_pres in the main frame.

```
1  <!DOCTYPE HTML PUBLIC "-//W3C//DTD HTML 4.01 Transitional//EN"
2   "http://www.w3.org/TR/html4/loose.dtd">
3
4  <html><head><title>Presence Counter</title>
5   <meta http-equiv="content-type" content="text/html; charset=iso-8859-1">
6   <meta http-equiv="refresh" content="10; URL=index.html">
7  </head>
8
9  <frameset rows="60,*">
10     <frame name="banner" src="banner.html" noresize="noresize" frameborder="0" scrolling="no">
11     <frameset cols="250,*" border="0" frameborder="0">
12         <frame name="frame-left" src="menu.html" noresize="noresize" frameborder="0" scrolling="no">
13         <frame name="default" src="script_current_pres" noresize="noresize" frameborder="0" scrolling="yes">
14     </frameset>
15 </frameset>
16
17 <noframes>
18     <body>
19         This web site requires your browser to support frames.
20     </body>
21 </noframes>
22 </html>
23
```

The file banner.html contains the heading of the website only.

The file menu.html generates a menu for opening the pages for displaying and setting the attendance figure in the left frame. The respective scripts will be called for this.

```
<!DOCTYPE HTML PUBLIC "-//W3C//DTD HTML 4.01 Transitional//EN"
"http://www.w3.org/TR/html4/loose.dtd">

<html><head><title></title>
<meta http-equiv="content-type" content="text/html; charset=iso-8859-1">
</head>
<body>
<pre>
<a href="/script_current_pres" target="default">Current presence</a>

<a href="/script_new_pres" target="default">Set new presence</a>

</pre>
</body></html>
```

The file include contains functions for HTML header, HTML footer, and formatting the query string that will be included in the two script files.

The file script_new_pres generates an HTML form for setting the actual attendance figure. The set value presence will be written into the file /tmp/presence with this.

```
#!/bin/sh

source /var/web/include
htmlHeader

# print HTML formular
cat<<EOF
Set new presence

</pre>
<form method=GET action="script_new_pres"><pre>

Presence    <input type="text" size="7" maxlength="7" name="presence">

<input type="submit" value="Set presence">
</pre></form><pre>
EOF

# prepare the query string to be nice (function in file "/var/web/include")
prep_querry_string

# extract the number from the query string
PRESENCE="$(echo $QUERY_STRING | cut -d'=' -f2 | cut -d'&' -f1)"

# exit, if there is no presence
if [ "$PRESENCE" == "" ] ; then
    htmlFooter
    exit
fi

# Write the presence to the file
echo -en "${PRESENCE}\n" > /tmp/presence

htmlFooter
```

Configuration

The file script_current_pres generates the age for displaying the actual attendance. The set value presence will be read out from the file /tmp/presence for this.

```
#!/bin/sh

source /var/web/include
htmlHeader

PRESENCE="$(cat /tmp/presence 2> /dev/null)"

if [ "$PRESENCE" == "" ] ; then
    echo -en "Presence has not been set\n\n"
else
    echo -en "The current presence is:\n"
    echo -en "${PRESENCE} &deg;C\n\n"
fi

htmlFooter

```

Monitoring App Configuration

A functional Monitoring App requires to add the individual devices, elements, logic operations, recipients, monitorings and actions as well as the assignment of actions to monitorings.

Perform the following steps for this:

- **Adding devices**
- **Adding elements**
- **Adding monitoring operations**
- **Adding actions**
- **Adding assignments**

Adding devices

It is necessary to add the Siemens LOGO! micro controller as a device for this application. How to add this.

1. Select in the menu the page → Setup application → Devices
2. Select the Add device button
   ✓ The "Add device" page appears.
3. Enter "LOGO!" as name, select the type "Logo" and the version "0BA7" and then enter the IP address and port of the LOGO! as well as the polling interval.
   ⓘ *The IP address depends on your application. Port 10001 is the default port setting of the LOGO!*

4. Click on OK
   ✓ You have added the devices that are necessary for the application with this.

Adding elements

It is necessary to add a recurrent timer and the up/down counter function block of the LOGO! micro controller for this application. How to add this.

1. Select in the menu the page → Setup application → Elements
2. Select the Add Element button
   ✓ The "Add element" page appears.
3. Enter "Timer" as name and select "Timer", "recurrent timer" and "15" seconds under Device

4. Click on OK
5. Select the Add element button again
6. Enter "Counter" as name and select "Logo", "LOGO!", "FB Function block", "Up/Down Counter" and Number "1" under Device

7. Click on OK
   ✓ You have added the elements that are necessary for the application with this.

Adding monitoring operations

It is necessary to monitor the expiry of the timer for this application. How to add this.

1. Select in the menu the page → Monitoring
2. Select the Add monitoring button
   ✓ The "Add monitoring" page appears.
3. Enter "Timer_exp" as name and select "Element", "Timer" and "finished" under Source

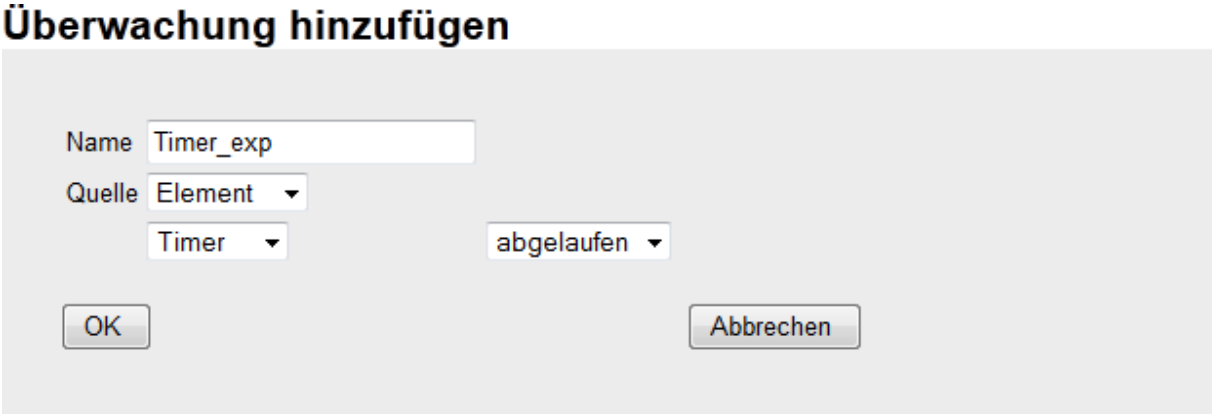

4. Click on OK
   ✓ You have added the monitoring operations that are necessary for the application with this.

Adding actions

It is necessary to set the value read out from the LOGO! using an HTTP call for this application. How to add this.

ⓘ *This HTTP call must be modified accordingly if you have set up a form in an own website or on an own web server.*

2. Select in the menu the page → Actions → Definitions
3. Select the Add action button
   ✓ The "Add action" page appears.
4. Enter "Set_counter" as name and select "HTTP" under Target
5. Enter the string "127.0.0.1/script_new_pres?presence=$(Counter)" as URL

   ⓘ *You'll enter the read out value "Counter" into the form of the website running in the sandbox with this.*

6. Enter "8080" as port.

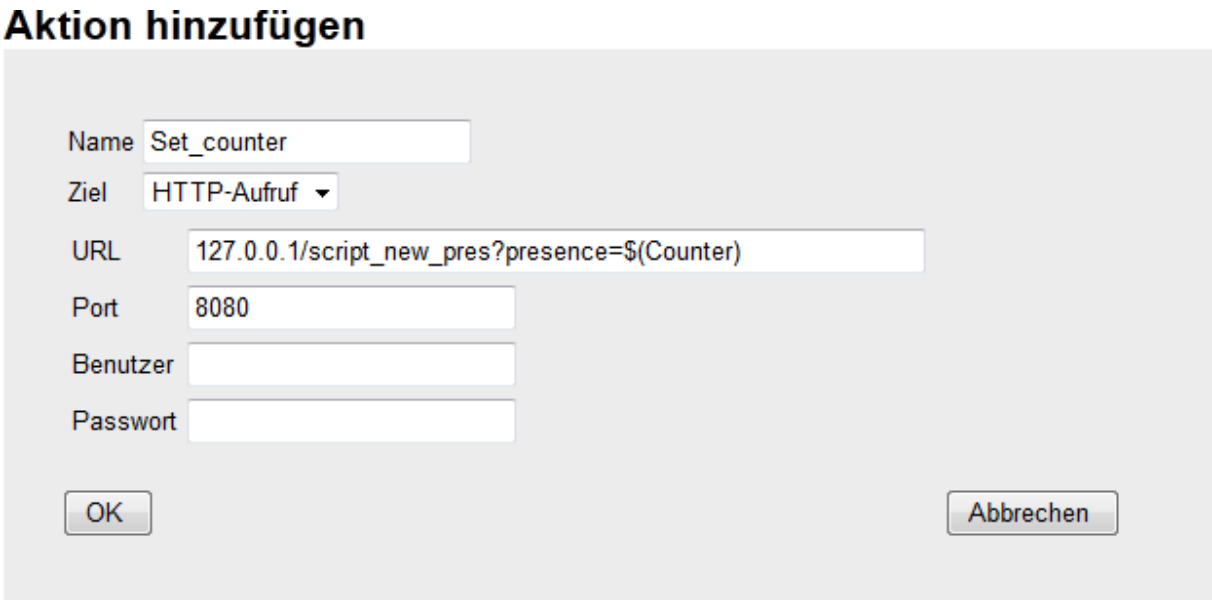

7. Click on OK
   ✓ You have added the actions that are necessary for the application with this.

Adding assignments

It is necessary to assign the respective actions to the monitorings for this application. How to add the assignments.

1. Select in the menu the page → Actions → Assignments
2. Select the Add assignment button
   ✓ The "Add assignment" page appears.
3. Select "Timer_exp" as Monitoring and "Set_counter" as Action

4. Click on OK
   ✓ You have added the assignments that are necessary for the application with this.

4 Test

Testing the application

The Monitoring App is active directly after configuration. If the Siemens LOGO! is connected and ready for operation, and the website as well as the web server are accessible, you may check the correct function directly by closing the inputs I1 and I2 of the LOGO! for several times to simulate an attendance change.

The value read out from the LOGO! will be indicated directly on the status page of the web interface of the Monitoring App (consider update interval).

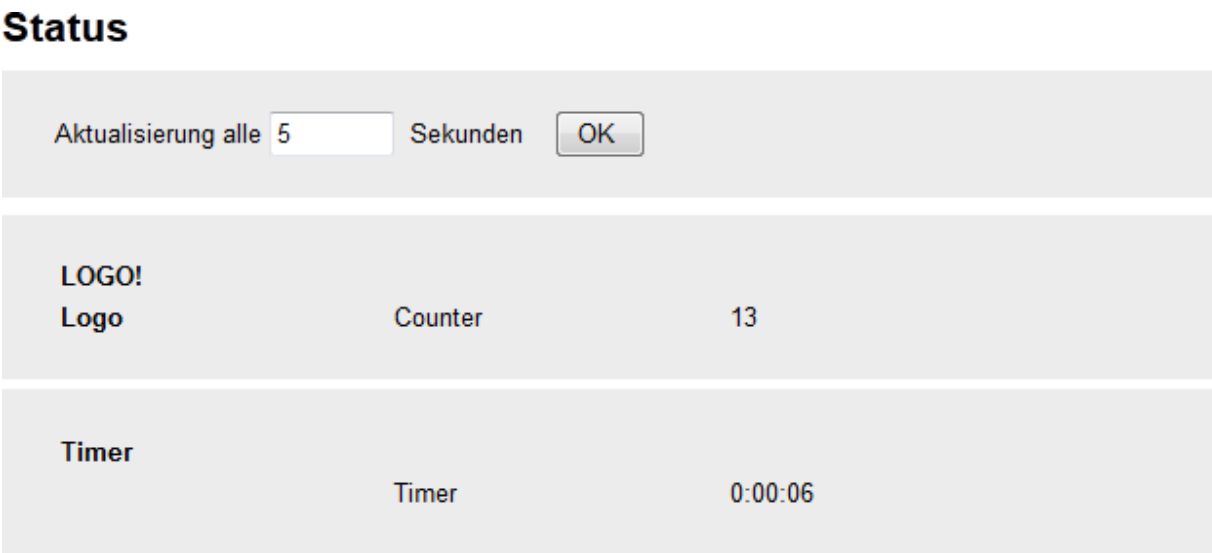

The value read out from the LOGO! will also be displayed on the website (it must also be considered here that a delay is caused by the timers and update intervals). If the website is on the sandbox web server, the call must be made via port 8080, e.g. http://192.168.1.1:8080/index.html.

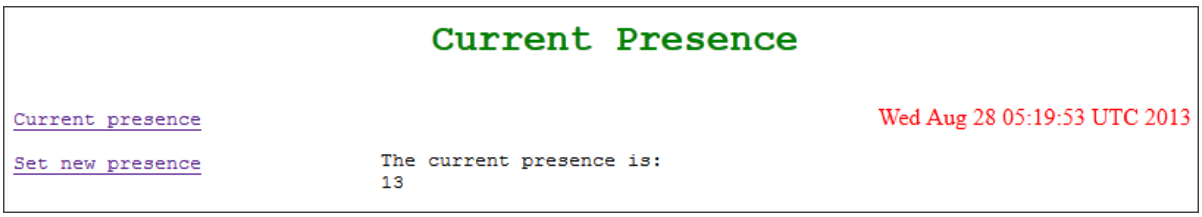

5 Used Components

Please observe: The power supply units required to operate devices are not listed here in detail. Take care for a provision at the site, if they are not part of the scope of delivery.

Hardware

Description	Manufacturer	Type	Version
Fault monitor	INSYS	IMON-G100 IMON-U300	Firmware 2.12.5 Monitoring 2.2.0
Micro controller	Siemens	LOGO!	0BA7

Table 1: Used hardware

Software

Description	Manufacturer	Type	Version
Operating system	Microsoft	Windows 7	Ultimate SP1
Browser	Mozilla	Firefox	39

Table 2: Used software

Germany

INSYS icom GmbH
Hermann-Köhl-Str. 22
93049 Regensburg
Germany

Phone +49 941 58692 0
Fax +49 941 58692 45

E-mail info@insys-icom.com
URL www.insys-icom.com

Czech Repulic

INSYS icom CZ, s.r.o.
Slovanská alej 1993 / 28a
326 00 Plzen-Východní Předměstí
Czech Republic

Phone +420 377 429 952
Fax +420 377 429 952
Mobile +420 777 651 188

E-mail info@insys-icom.cz
URL www.insys-icom.cz